Introduction of Cokoino Expansion board for Arduino UNO

Table

1. Appearance of Cokoino Expansion board for Arduino UNO 2

2. Overview 2

3. Introduction 3

4. Summaries 5

1. Appearance of Cokoino Expansion board for Arduino UNO

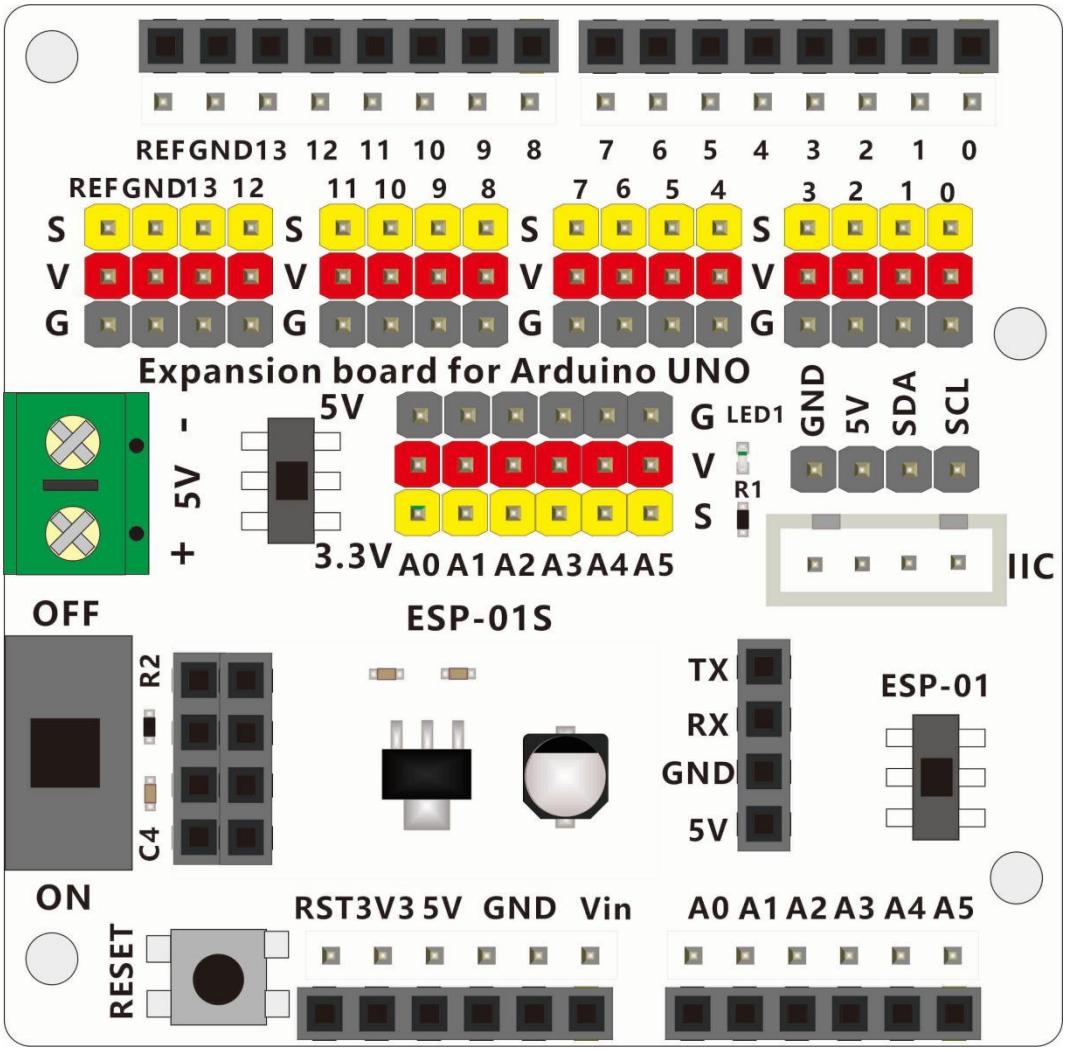

2. Overview

The Cokoino Expansion board for Arduino UNO adopts a stacked design. The expansion board not only replicates the female interface of Arduino UNO, but also extends all digital and analog interfaces of Arduino Uno in the form of servo line sequence (G, V, S). It also has two IIC interfaces, one Bluetooth module communication interface, and one ESP8266 module communication interface specially designed. A 5V power terminal has been set up, which can be connected to an external 5V

power supply to power the Arduino Uno. A 5V/3.3V switch has been set up. When the switch is turned to 5V, the power supply for the digital and analog interfaces on the expansion board is 5V. When the switch is turned to 3.3V, the power supply for the digital and analog interfaces on the expansion board is 3.3V. This allows the expansion board to be connected to both 5V and 3.3V signal sensors. An ON/OFF switch has been set up to control the power on/off of the expansion board.

3. Introduction

For the main components and functions of the Robot Control Board, please refer to the following table.

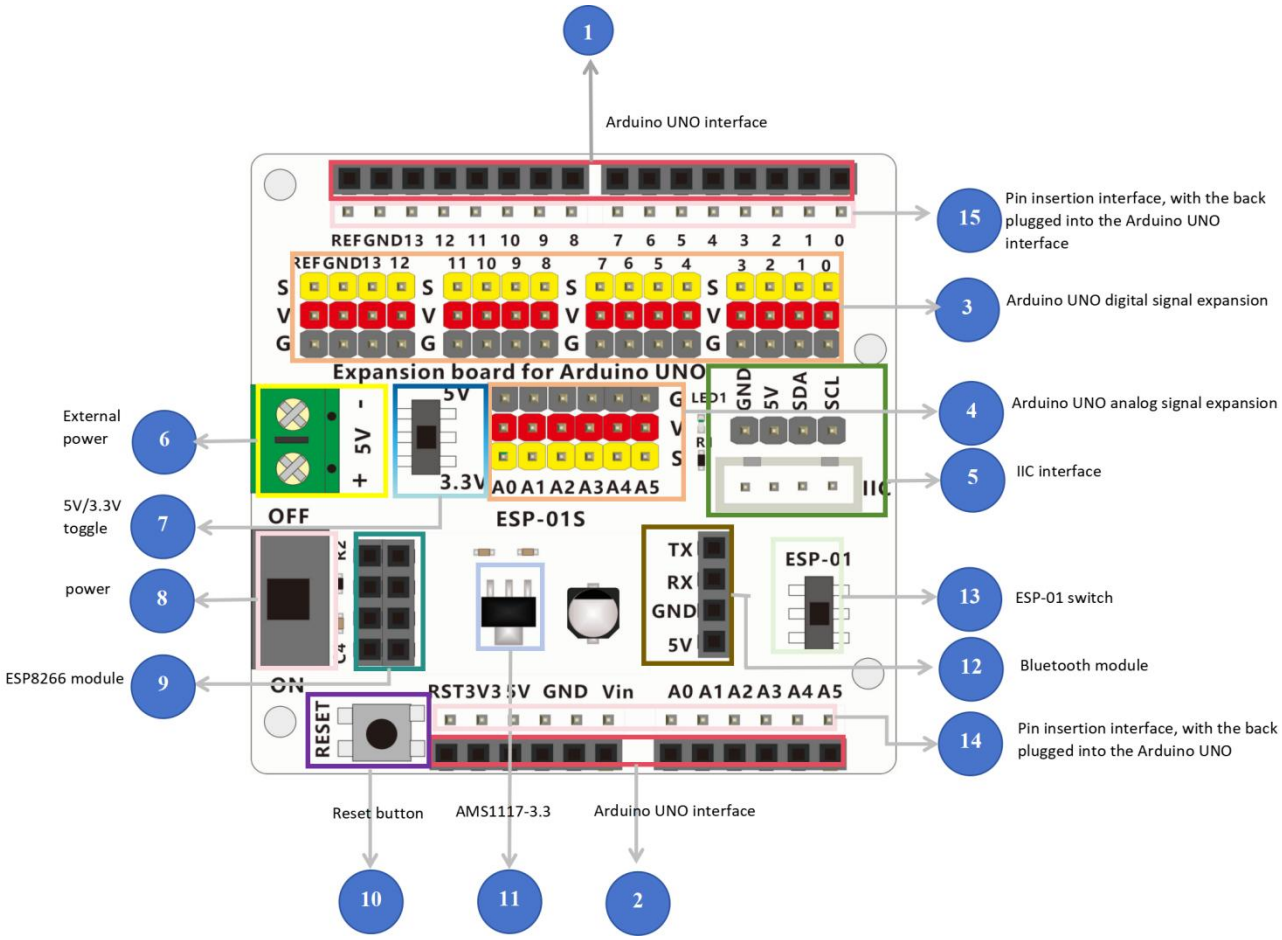

1	Arduino UNO interface	Corresponding to the 0-13 digital signal pins, GND and REF pins of Arduino UNO.
2	Arduino UNO interface	Corresponding to the A0~A5 analog signal pins,and (Vin, GND, 5V, 3V3, RST) pins of Arduino UNO.
3	Arduino UNO digital signal expansion interface, (G, V, S interface)	Expanded the 0-13 digital signal pins, GND and REF pins of Arduino UNO, and correspondingly expanded VCC and GND to facilitate the connection of digital signal sensors.
4	Arduino UNO analog signal expansion interface, (G, V, S interface)	Expanded the A0~A5 analog signal pins of Arduino UNO, and correspondingly expanded VCC and GND to facilitate the connection of analog signal sensors.
5	IIC interface	Expand two IIC interfaces to facilitate the connection of the 1602LCD module or other modules for IIC communication. SDA：IIC data port (multifunction IO port, common pin with A4) SCL：IIC clock port (multifunction IO port, common pin with A5)
6	External power interface	External power interface, connected to 5V, can provide power to Arduino UNO through the expansion board, allowing Arduino UNO to function normally without the need for separate power supply.
7	5V to 3.3V chip	DC to DC 3.3V regulator system, convert 5V to DC3.3V
8	Power Switch	Dial to ON to power on, dial to OFF to power off
9	ESP8266 module interface	Plug ESP8266 Module and reach ESP8266 function
10	Reset button	Expanded the reset button on the Arduino UNO board, pressing the button can reset the Arduino UNO.
11	AMS1117-3.3	5V to 3.3V chip，DC to DC 3.3V regulator system, convert 5V to DC3.3V.

12	Bluetooth module interface	Plug bluetooth Module and reach bluetooth function.
13	ESP-01 switch	When the switch is turned to the "ESP-01" silk screen side, the TX and RX of the ESP8266 interface and Bluetooth interface are connected to the TX and RX of the Arduino UNO; When the switch is turned to the side away from the "ESP-01" silk screen, the TX and RX of the ESP8266 interface and Bluetooth interface are disconnected from the TX and RX of the Arduino UNO.
14	Pin insertion interface, with the back plugged into the Arduino UNO interface	Insert it into the analog signal socket of the Arduino UNO and extend the analog signal of the Arduino UNO to the expansion board.
15		Insert it into the digital signal socket of the Arduino UNO and extend the digital signal of the Arduino UNO to the expansion board.

4. Summaries

The Cokoino Expansion board for Arduino UNO is very powerful.

It extends all the pins of Arduino UNO, and adds GND and VCC pins next to the digital and analog signal pins, similar to the wire sequence form of servos (G, V, S), making it very convenient to connect servos or other 3-pin sensors.

The AMS1117-3.3 voltage conversion chip is configured on the expansion board, and the VCC voltage can be switched using a 5V/3.3V switch, making the expansion board suitable for sensors with 5V and 3.3V power requirements.

The interface of the ESP8266 module can be easily inserted into the ESP8266 module to meet the wireless communication function of Arduino UNO. It can be accessed through the Internet in a few minutes, can be wirelessly connected to a modem or router, and can be accessed from a PC or smart phone to control the device. In addition, the expansion board also integrates 5V -3V3 communication signal level transmission (UART) between Arduino and ESP8266, allowing ESP8266 to operate continuously without burning communication pins (TX, RX).

ESP-01 Switch establishes communication mode with Arduino UNO and program upload mode. When the switch is turned to the "ESP-01" silk screen side, the TX and RX of the ESP8266 interface

and Bluetooth interface are connected to the TX and RX of the Arduino UNO, establishing communication between the ESP8266 module/Bluetooth module and the Arduino UNO. At this time, the program cannot be uploaded to the Arduino UNO; When the switch is turned to the side away from the "ESP-01" silk screen, the TX and RX of the ESP8266 interface and Bluetooth interface are disconnected from the TX and RX of the Arduino UNO, and the ESP8266 module/Bluetooth module and Arduino UNO are disconnected from communication. At this time, programs can be uploaded to the Arduino UNO normally.

The Bluetooth module interface can be easily inserted into the Bluetooth module to meet the Bluetooth communication function of Arduino UNO.

The IIC interface can be easily connected to the IIC communication module, such as the 1602LCD module, which only requires a 4-pin DuPont cable to complete the connection.

An external 5V power interface has been set up, which can provide power to the Arduino UNO after power on, allowing the Arduino UNO to function without the need for separate power supply. It is also possible to provide power to the Arduino UNO separately. After inserting this expansion board into the Arduino UNO, it can be used as a power output to prevent 5V power output from the 5V power interface on the expansion board.

The power switch has been set up to easily turn on and off the power on the expansion board, while the Arduino UNO can only be powered off by disconnecting the power cord during use.

For beginners of Arduino, there is no need to worry about tedious and complex circuit wiring. This Arduino UNO expansion board truly simplifies the circuit and can easily connect commonly used sensors. A sensor only requires a universal 3P sensor connection wire (regardless of digital or analog connection wires). After completing the circuit connection, write the corresponding Arduino program to download to the Arduino controller to read sensor data or receive wireless module feedback data. After calculation and processing, you can easily complete your own interactive works. You can use it to DIY more experiments, expand more functions, and help realize the ideas in your mind.